LD1086

1.5 A adjustable and fixed low drop positive voltage regulator

Datasheet - production data

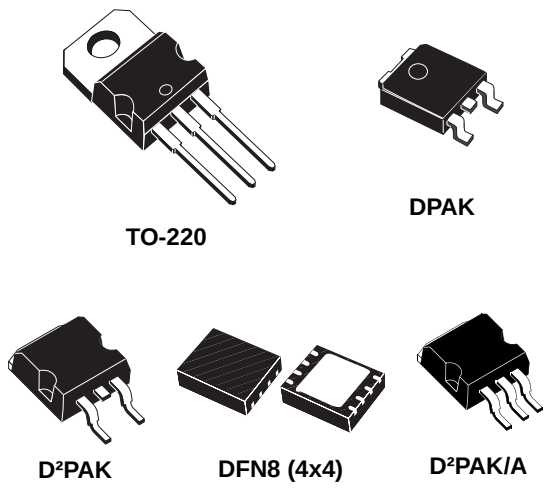

Features

- Typical dropout: 1.3 V at 1.5 A
- Three-terminal adjustable or fixed output voltage: 1.8 V, 2.5 V, 3.3 V, 5 V, 12 V
- Automotive grade (adjustable V_{OUT} in TO-220 and DPAK packages only)
- Output current guaranteed up to 1.5 A
- Output tolerance: ± 1% at 25 °C and ± 2% in full temperature range
- Internal power and thermal limit
- Wide operating temperature range - 40 °C to 125 °C
- Package available: TO-220, D²PAK, D²PAK/A, DPAK and DFN8 (4x4)
- Pinout compatibility with standard adjustable voltage regulators

Description

The LD1086 is a low drop voltage regulator capable of providing up to 1.5 A of output current. Dropout is guaranteed at a maximum of 1.2 V at the maximum output current, decreasing at lower loads. The LD1086 is pin-to-pin compatible with older 3-terminal adjustable regulators, but has better performance in terms of drop and output tolerance. Unlike PNP regulators, where a part of the output current is wasted as quiescent current, the LD1086 quiescent current flows into the load, increasing efficiency. Only a 10 µF (minimum) capacitor is needed for stability. The device is available in a TO-220, D²PAK, D²PAK/A, DPAK or DFN8 (4x4) package. On-chip trimming allows the regulator to reach a very tight output voltage tolerance; within ± 1% at 25 °C. The LD1086 is available as automotive grade for adjustable output voltages in the TO-220 and DPAK packages. The PAT, SYL, SBL statistical tests have been performed, and the devices are qualified according to the AEC-Q100 specification for the automotive market in the temperature range of - 40 °C to 125 °C.

This is information on a product in full production. www.st.com

Contents

1 Diagram 5

2 Pin configuration 6

3 Maximum ratings 7

4 Schematic application 8

5 Electrical characteristics 9

6 Typical application 17

7 Package information 22

7.1 TO-220 (STD-ST dual gauge) type A package information 23

7.2 DPAK package information 25

7.3 D²PAK (SMD 2L STD-ST) type A package information 28

7.4 D²PAK (SMD 3L STD-ST) type A package information 30

7.5 DPAK and D²PAK packing information 33

7.6 DFN8 (4x4) package information 35

7.7 DFN8 (4x4) packing information 37

8 Ordering information 39

9 Revision history 40

List of tables

Table 1. Absolute maximum ratings . . . 7
Table 2. Thermal data. . . . 7
Table 3. Electrical characteristics of LD1086#18 . . . 9
Table 4. Electrical characteristics of LD1086#25 . . . 10
Table 5. Electrical characteristics of LD1086#33 . . . 11
Table 6. Electrical characteristics of LD1086#50 . . . 12
Table 7. Electrical characteristics of LD1086#12 . . . 13
Table 8. Electrical characteristics of LD1086B# . . . 14
Table 9. Electrical characteristics of LD1086# . . . 15
Table 10. Electrical characteristics of LD1086DTTRY and LD1086VY (Automotive grade). . . . 16
Table 11. TO-220 (STD-ST dual gauge) type A mechanical data . . . 24
Table 12. DPAK mechanical data. . . . 26
Table 13. D²PAK (SMD 2L STD-ST) type A mechanical data . . . 29
Table 14. D²PAK (SMD 3L STD-ST) type A mechanical data . . . 31
Table 15. DPAK and D²PAK tape and reel mechanical data . . . 34
Table 16. DFN8 (4x4) mechanical data . . . 36
Table 17. DFN8 (4x4) reel mechanical data . . . 37
Table 18. Order code . . . 39
Table 19. Document revision history . . . 40

List of figures

Figure 1. Schematic diagram . . . 5
Figure 2. Pin connections (top view) . . . 6
Figure 3. Application circuit . . . 8
Figure 4. Output voltage vs. temp. (VI = 5 V) . . . 17
Figure 5. Output voltage vs. temp. (VI = 15 V) . . . 17
Figure 6. Output voltage vs. temperature (VI = 4.25 V) . . . 17
Figure 7. Short-circuit current vs. dropout voltage . . . 17
Figure 8. Line regulation vs. temperature . . . 17
Figure 9. Load regulation vs. temperature . . . 17
Figure 10. Dropout voltage vs. temperature . . . 18
Figure 11. Dropout voltage vs. output current . . . 18
Figure 12. Adjust pin current vs. input voltage . . . 18
Figure 13. Adjust pin current vs. temperature . . . 18
Figure 14. Adjust pin current vs. output current . . . 18
Figure 15. Quiescent current vs. output current . . . 18
Figure 16. Quiescent current vs. input voltage . . . 19
Figure 17. Supply voltage rejection vs. output current . . . 19
Figure 18. Supply voltage rejection vs. frequency . . . 19
Figure 19. Supply voltage rejection vs. temperature . . . 19
Figure 20. Minimum load current vs. temperature . . . 19
Figure 21. Stability for adjustable . . . 19
Figure 22. Stability for 2.85 V . . . 20
Figure 23. Stability for 12 V . . . 20
Figure 24. Line transient (VI = 12 to 13 V) . . . 20
Figure 25. Line transient (IO = 200 mA) . . . 20
Figure 26. Line transient (CADJ = 1 µF) . . . 20
Figure 27. Load transient . . . 20
Figure 28. Load transient (Trise = Tfall = 10 µs) . . . 21
Figure 29. Thermal protection . . . 21
Figure 30. TO-220 (STD-ST dual gauge) type A package outline . . . 23
Figure 31. DPAK package outline . . . 25
Figure 32. DPAK recommended footprint (dimension are in mm) . . . 27
Figure 33. D²PAK (SMD 2L STD-ST) type A package outline . . . 28
Figure 34. D²PAK (SMD 3L STD-ST) type A outline . . . 30
Figure 35. D²PAK (SMD 3L) recommended footprint . . . 32
Figure 36. DPAK and D²PAK tape outline . . . 33
Figure 37. DPAK and D²PAK reel outline . . . 34
Figure 38. DFN8 (4x4) package outline . . . 35
Figure 39. DFN8 (4x4) recommended footprint . . . 36
Figure 40. DFN8 (4x4) tape outline (dimension are in mm) . . . 37
Figure 41. DFN8 (4x4) reel outline . . . 38

1 Diagram

Figure 1. Schematic diagram

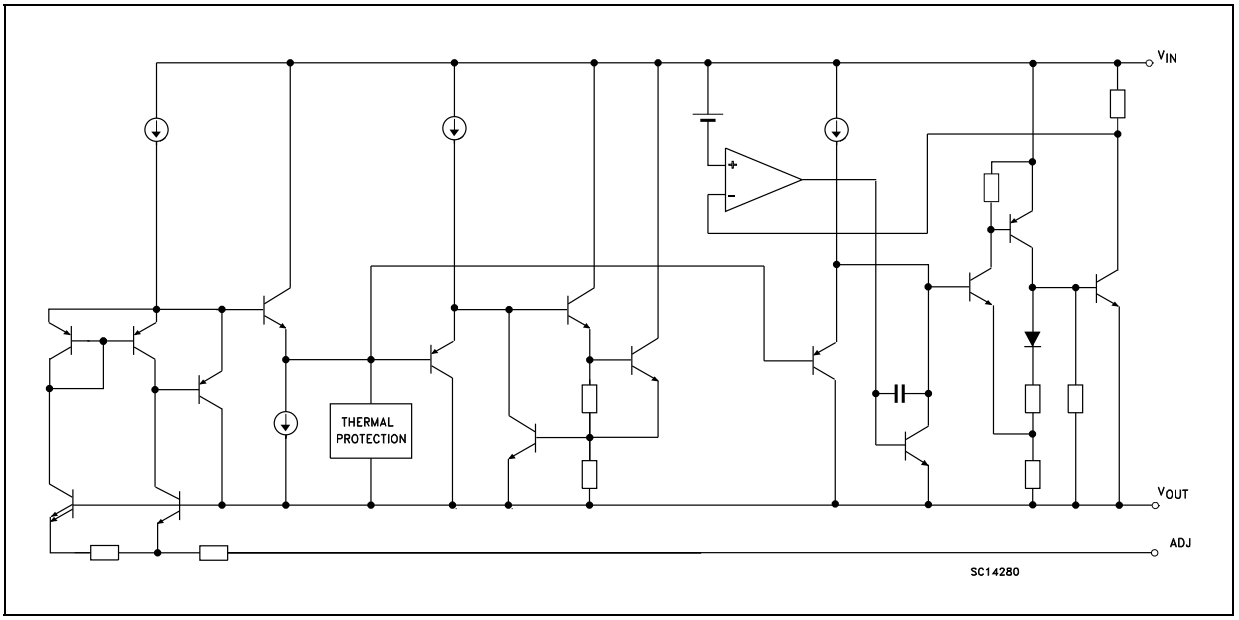

2 Pin configuration

Figure 2. Pin connections (top view)

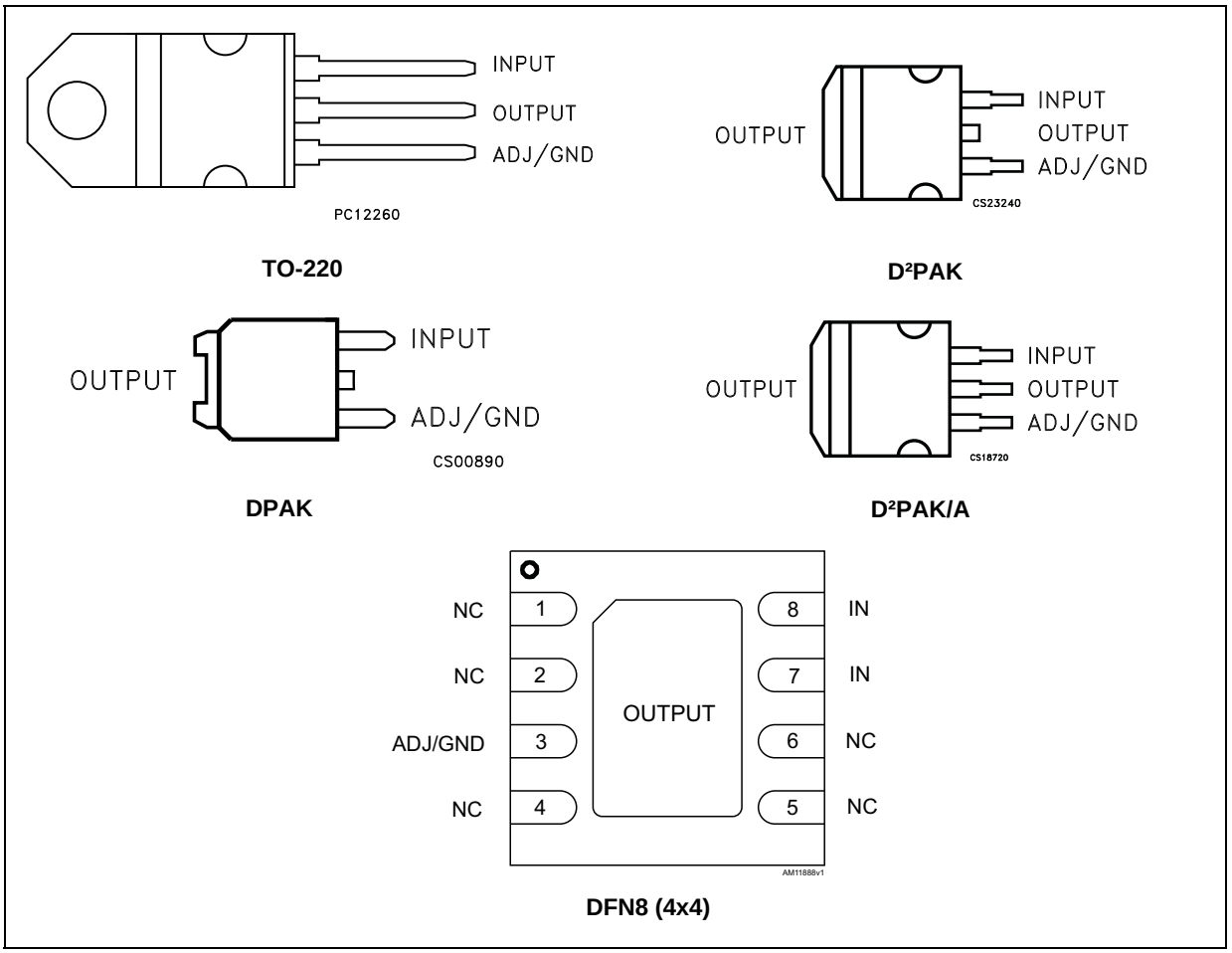

Note: The TAB is physically connected to the output (this is valid for the TO-220 package too).

3 Maximum ratings

Table 1. Absolute maximum ratings

Symbol	Parameter	Value	Unit
V_I	DC input voltage	30	V
I_O	Output current	Internally Limited	mA
P_D	Power dissipation	Internally Limited	mW
T_{STG}	Storage temperature range	-55 to +150	°C
T_J	Junction temperature range	-40 to +150	°C

Note: Absolute maximum ratings are those values beyond which damage to the device may occur. Functional operation under these conditions is not implied.

Table 2. Thermal data

Symbol	Parameter	TO-220	D²PAK D²PAK/A	DPAK	DFN8 (4x4)	Unit
R_{thJC}	Thermal resistance junction-case	5	3	8	1.5	°C/W
R_{thJA}	Thermal resistance junction-ambient	50	62.5	100	33	°C/W

4 Schematic application

Figure 3. Application circuit

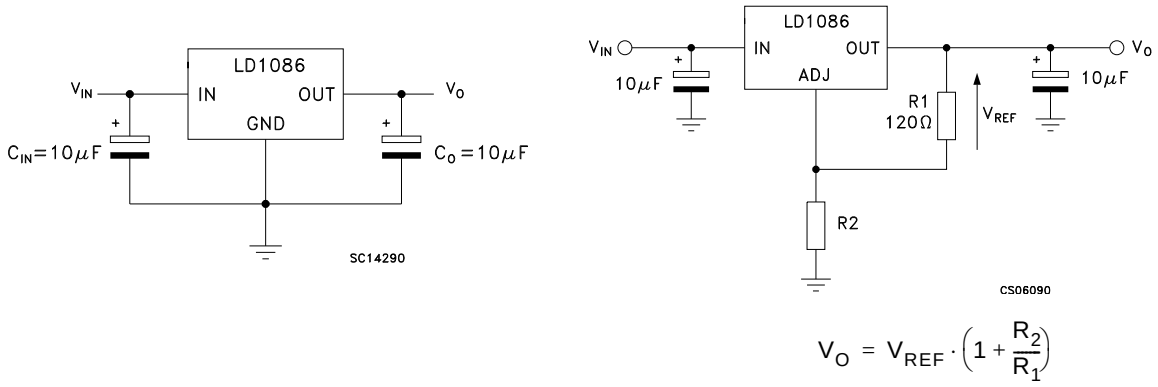

$$V_O = V_{REF} \cdot \left(1 + \frac{R_2}{R_1}\right)$$

5 Electrical characteristics

V_I = 4.8 V, C_I = C_O =10 µF, T_A = -40 to 125 °C, unless otherwise specified.

Table 3. Electrical characteristics of LD1086#18

Symbol	Parameter	Test conditions	Min.	Typ.	Max.	Unit
V_O	Output voltage (1)	I_O = 0 mA, T_J = 25 °C	1.782	1.8	1.818	V
		I_O = 0 to 1.5 A, V_I = 3.4 to 30 V	1.764	1.8	1.836	V
ΔV_O	Line regulation	I_O = 0 mA, V_I = 3.4 to 18 V, T_J = 25 °C		0.2	4	mV
		I_O = 0 mA, V_I = 3.4 to 15 V		0.4	4	mV
ΔV_O	Load regulation	I_O = 0 to 1.5 A, T_J = 25 °C		0.5	8	mV
		I_O = 0 to 1.5 A		1	16	mV
V_d	Dropout voltage	I_O = 1.5 A		1.3	1.5	V
I_q	Quiescent current	$V_I \leq 30$ V		5	10	mA
I_{sc}	Short-circuit current	V_I - V_O = 5 V	1.5	2		A
		V_I - V_O = 25 V	0.05	0.02		A
	Thermal regulation	T_A = 25 °C, 30 ms pulse		0.01	0.04	%/W
SVR	Supply voltage rejection	f = 120 Hz, C_O = 25 µF, I_O = 1.5 A V_I = 6.8 ± 3 V	60	82		dB
eN	RMS output noise voltage (% of V_O)	T_A = 25 °C, f =10 Hz to 10 kHz		0.003		%
S	Temperature stability			0.5		%
S	Long term stability	T_A = 125 °C, 1000 Hrs		0.5		%

1. See short-circuit current curve for available output current at fixed dropout.

V_I = 5.5 V, C_I = C_O =10 µF, T_A = -40 to 125 °C, unless otherwise specified.

Table 4. Electrical characteristics of LD1086#25

Symbol	Parameter	Test conditions	Min.	Typ.	Max.	Unit
V_O	Output voltage (1)	I_O = 0 mA, T_J = 25 °C	2.475	2.5	2.525	V
		I_O = 0 to 1.5 A, V_I = 4.1 to 30 V	2.45	2.5	2.55	V
ΔV_O	Line regulation	I_O = 0 mA, V_I = 4.1 to 18 V, T_J = 25 °C		0.2	4	mV
		I_O = 0 mA, V_I = 4.1 to 18 V		0.4	4	mV
ΔV_O	Load regulation	I_O = 0 to 1.5 A, T_J = 25 °C		0.5	8	mV
		I_O = 0 to 1.5 A		1	16	mV
V_d	Dropout voltage	I_O = 1.5 A		1.3	1.5	V
I_q	Quiescent current	$V_I \leq 30$ V		5	10	mA
I_{sc}	Short-circuit current	V_I - V_O = 5 V	1.5	2		A
		V_I - V_O = 25 V	0.05	0.2		A
	Thermal regulation	T_A = 25 °C, 30 ms pulse		0.008	0.04	%/W
SVR	Supply voltage rejection	f = 120 Hz, C_O = 25 µF, I_O = 1.5 A V_I = 7.5 ± 3 V	60	81		dB
eN	RMS output noise voltage (% of V_O)	T_A = 25 °C, f =10 Hz to 10 kHz		0.003		%
S	Temperature stability			0.5		%
S	Long term stability	T_A = 125 °C, 1000 Hrs		0.5		%

1. See short-circuit current curve for available output current at fixed dropout.

V_I = 6.3 V, C_I = C_O =10 µF, T_A = -40 to 125 °C, unless otherwise specified.

Table 5. Electrical characteristics of LD1086#33

Symbol	Parameter	Test conditions	Min.	Typ.	Max.	Unit
V_O	Output voltage (1)	I_O = 0 mA, T_J = 25 °C	3.267	3.3	3.333	V
		I_O = 0 to 1.5 A, V_I = 4.9 to 30 V	3.234	3.3	3.366	V
ΔV_O	Line regulation	I_O = 0 mA, V_I = 4.9 to 18 V, T_J = 25 °C		0.5	6	mV
		I_O = 0 mA, V_I = 4.9 to 18 V		1	6	mV
ΔV_O	Load regulation	I_O = 0 to 1.5 A, T_J = 25 °C		1	10	mV
		I_O = 0 to 1.5 A		7	25	mV
V_d	Dropout voltage	I_O = 1.5 A		1.3	1.5	V
I_q	Quiescent current	$V_I \leq 30$ V		5	10	mA
I_{sc}	Short-circuit current	V_I - V_O = 5 V	1.5	2		A
		V_I - V_O = 25 V	0.05	0.2		A
	Thermal regulation	T_A = 25 °C, 30 ms pulse		0.008	0.04	%/W
SVR	Supply voltage rejection	f = 120 Hz, C_O = 25 µF, I_O = 1.5 A V_I = 8.3 ± 3 V	60	79		dB
eN	RMS output noise voltage (% of V_O)	T_A = 25 °C, f =10 Hz to 10 kHz		0.003		%
S	Temperature stability			0.5		%
S	Long term stability	T_A = 125 °C, 1000 Hrs		0.5		%

1. See short-circuit current curve for available output current at fixed dropout.

V_I = 8 V, C_I = C_O =10 µF, T_A = -40 to 125 °C, unless otherwise specified.

Table 6. Electrical characteristics of LD1086#50

Symbol	Parameter	Test conditions	Min.	Typ.	Max.	Unit
V_O	Output voltage (1)	I_O = 0 mA, T_J = 25 °C	4.95	5	5.05	V
		I_O = 0 to 1.5 A, V_I = 6.6 to 30 V	4.9	5	5.1	V
ΔV_O	Line regulation	I_O = 0 mA, V_I = 6.6 to 20V, T_J = 25 °C		0.5	10	mV
		I_O = 0 mA, V_I = 6.6 to 20 V		1	10	mV
ΔV_O	Load regulation	I_O = 0 to 1.5 A, T_J = 25 °C		5	20	mV
		I_O = 0 to 1.5 A		10	35	mV
V_d	Dropout voltage	I_O = 1.5 A		1.3	1.5	V
I_q	Quiescent current	$V_I \leq 30$ V		5	10	mA
I_{sc}	Short-circuit current	V_I - V_O = 5 V	1.5	2		A
		V_I - V_O = 25 V	0.05	0.2		A
	Thermal regulation	T_A = 25 °C, 30 ms pulse		0.01	0.04	%/W
SVR	Supply voltage rejection	f = 120 Hz, C_O = 25 µF, I_O = 1.5 A V_I = 10 ± 3 V	60	75		dB
eN	RMS output noise voltage (% of V_O)	T_A = 25 °C, f =10 Hz to 10 kHz		0.003		%
S	Temperature stability			0.5		%
S	Long term stability	T_A = 125 °C, 1000 Hrs		0.5		%

1. See short-circuit current curve for available output current at fixed dropout.

V_I = 15 V, C_I = C_O =10 µF, T_A = -40 to 125 °C, unless otherwise specified.

Table 7. Electrical characteristics of LD1086#12

Symbol	Parameter	Test conditions	Min.	Typ.	Max.	Unit
V_O	Output voltage (1)	I_O = 0 mA, T_J = 25 °C	11.88	12	12.12	V
		I_O = 0 to 1.5 A, V_I = 13.8 to 30 V	11.76	12	12.24	V
ΔV_O	Line regulation	I_O = 0 mA, V_I = 13.8 to 25 V, T_J = 25 °C		1	25	mV
		I_O = 0 mA, V_I = 13.8 to 25 V		2	25	mV
ΔV_O	Load regulation	I_O = 0 to 1.5 A, T_J = 25 °C		12	36	mV
		I_O = 0 to 1.5 A		24	72	mV
V_d	Dropout voltage	I_O = 1.5 A		1.3	1.5	V
I_q	Quiescent current	$V_I \leq 30$ V		5	10	mA
I_{sc}	Short-circuit current	V_I - V_O = 5 V	1.5	2		A
		V_I - V_O = 25 V	0.05	0.2		A
	Thermal regulation	T_A = 25 °C, 30 ms pulse		0.01	0.04	%/W
SVR	Supply voltage rejection	f = 120 Hz, C_O = 25 µF, I_O = 1.5 A V_I = 17 ± 3 V	54	66		dB
eN	RMS output noise voltage (% of V_O)	T_A = 25 °C, f =10 Hz to 10 kHz		0.003		%
S	Temperature stability			0.5		%
S	Long term stability	T_A = 125 °C, 1000 Hrs		0.5		%

1. See short-circuit current curve for available output current at fixed dropout.

V_I = 4.25 V, C_I = C_O =10 µF, T_A = -40 to 125 °C, unless otherwise specified.

Table 8. Electrical characteristics of LD1086B#

Symbol	Parameter	Test conditions	Min.	Typ.	Max.	Unit
V_{ref}	Reference voltage (1)	I_O = 10 mA T_J = 25 °C	1.231	1.25	1.269	V
		I_O = 10 mA to 1.5 A, V_I = 2.85 to 30 V	1.219	1.25	1.281	V
ΔV_O	Line regulation	I_O = 10 mA, V_I = 2.8 to 16.5 V, T_J = 25 °C		0.015	0.2	%
		I_O = 10 mA, V_I = 2.8 to 16.5 V		0.035	0.2	%
ΔV_O	Load regulation	I_O = 10 mA to 1.5 A, T_J = 25 °C		0.1	0.3	%
		I_O = 0 to 1.5 A		0.2	0.4	%
V_d	Dropout voltage	I_O = 1.5 A		1.3	1.5	V
$I_{O(min)}$	Minimum load current	V_I = 30 V		3	10	mA
I_{sc}	Short-circuit current	V_I - V_O = 5 V	1.5	2.3		A
		V_I - V_O = 25 V	0.05	0.2		A
	Thermal regulation	T_A = 25 °C, 30 ms pulse		0.01	0.04	%/W
SVR	Supply voltage rejection	f = 120 Hz, C_O = 25 µF,C_{ADJ} = 25 µF, I_O = 1.5 A, V_I = 6.25 ± 3 V	60	88		dB
I_{ADJ}	Adjust pin current	V_I = 4.25 V, I_O = 10 mA		40	120	µA
ΔI_{ADJ}	Adjust pin current change (1)	I_O = 10 mA to 1.5 A, V_I = 2.8 to 16.5 V		0.2	5	µA
eN	RMS output noise voltage (% of V_O)	T_A = 25 °C, f =10 Hz to 10 kHz		0.003		%
S	Temperature stability			0.5		%
S	Long term stability	T_A = 125 °C, 1000 Hrs		0.5		%

1. See short-circuit current curve for available output current at fixed dropout.

V_I = 4.25 V, C_I = C_O =10 µF, T_A = -40 to 125 °C, unless otherwise specified.

Table 9. Electrical characteristics of LD1086#

Symbol	Parameter	Test conditions	Min.	Typ.	Max.	Unit
V_{ref}	Reference voltage (1)	I_O = 10 mA T_J = 25 °C	1.237	1.25	1.263	V
		I_O = 10 mA to 1.5 A, V_I = 2.85 to 30 V	1.225	1.25	1.275	V
ΔV_O	Line regulation	I_O = 10 mA, V_I = 2.8 to 16.5 V, T_J = 25 °C		0.015	0.2	%
		I_O = 10 mA, V_I = 2.8 to 16.5 V		0.035	0.2	%
ΔV_O	Load regulation	I_O = 10 mA to 1.5 A, T_J = 25 °C		0.1	0.3	%
		I_O = 0 to 1.5 A		0.2	0.4	%
V_d	Dropout voltage	I_O = 1.5 A		1.3	1.5	V
$I_{O(min)}$	Minimum load current	V_I = 30 V		3	10	mA
I_{sc}	Short-circuit current	V_I - V_O = 5 V	1.5	2.3		A
		V_I - V_O = 25 V	0.05	0.2		A
	Thermal regulation	T_A = 25 °C, 30 ms pulse		0.01	0.04	%/W
SVR	Supply voltage rejection	f = 120 Hz, C_O = 25 µF,C_{ADJ} = 25 µF, I_O = 1.5 A, V_I = 6.25 ± 3 V	60	88		dB
I_{ADJ}	Adjust pin current	V_I = 4.25 V, I_O = 10 mA		40	120	µA
ΔI_{ADJ}	Adjust pin current change (1)	I_O = 10 mA to 1.5 A, V_I = 2.8 to 16.5 V		0.2	5	µA
eN	RMS output noise voltage (% of V_O)	T_A = 25 °C, f =10 Hz to 10 kHz		0.003		%
S	Temperature stability			0.5		%
S	Long term stability	T_A = 125 °C, 1000 Hrs		0.5		%

1. See short-circuit current curve for available output current at fixed dropout.

V_I = 4.25 V, C_I = C_O =10 µF, T_A = -40 to 125 °C, unless otherwise specified.

Table 10. Electrical characteristics of LD1086DTTRY and LD1086VY (Automotive grade)

Symbol	Parameter	Test conditions	Min.	Typ.	Max.	Unit
V_{ref}	Reference voltage (1)	I_O = 10 mA T_A = 25 °C	1.237	1.25	1.263	V
		I_O = 10 mA to 1.5 A, V_I = 2.85 to 30 V	1.225	1.25	1.275	V
ΔV_O	Line regulation	I_O = 10 mA, V_I = 2.8 to 16.5 V		0.035	0.2	%
ΔV_O	Load regulation	I_O = 0 to 1.5 A		0.2	0.4	%
V_d	Dropout voltage	I_O = 1.5 A		1.3	1.5	V
$I_{O(min)}$	Minimum load current	V_I = 30 V		3	10	mA
I_{sc}	Short-circuit current	V_I - V_O = 5 V, T_A = 25 °C	1.5	2.3		A
		V_I - V_O = 25 V, T_A = 25 °C	0.05	0.2		A
	Thermal regulation	T_A = 25 °C, 30 ms pulse		0.01	0.04	%/W
SVR	Supply voltage rejection	f = 120 Hz, C_O = 25 µF,C_{ADJ} = 25 µF, I_O = 1.5 A, V_I = 6.25 ± 3 V, T_A = 25 °C	60	88		dB
I_{ADJ}	Adjust pin current	V_I = 4.25 V, I_O = 10 mA		40	120	µA
ΔI_{ADJ}	Adjust pin current change (1)	I_O = 10 mA to 1.5 A, V_I = 2.8 to 16.5 V		0.2	5	µA
eN	RMS output noise voltage (% of V_O)	T_A = 25 °C, f =10 Hz to 10 kHz		0.003		%
S	Temperature stability			0.5		%
S	Long term stability	T_A = 125 °C, 1000 Hrs		0.5		%

1. See short-circuit current curve for available output current at fixed dropout.

6 Typical application

Unless otherwise specified T_J = 25 °C, C_I = C_O = 10 µF.

Figure 4. Output voltage vs. temp. (V_I = 5 V)

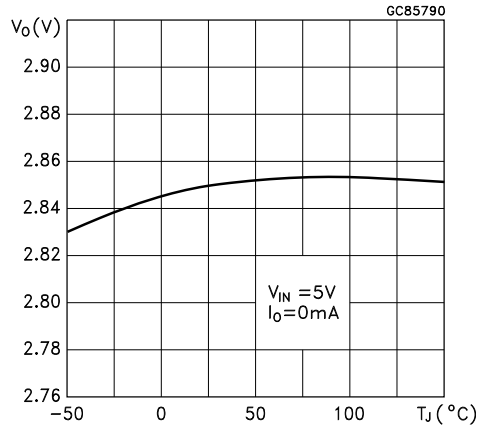

Figure 5. Output voltage vs. temp. (V_I = 15 V)

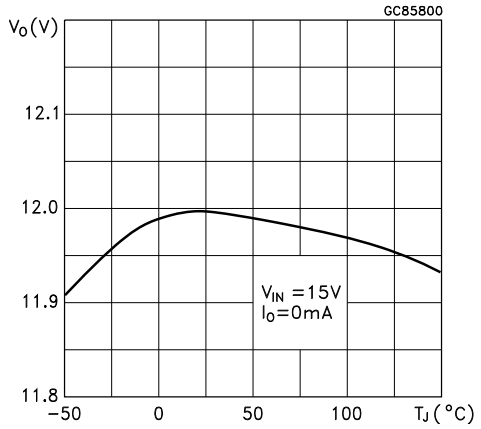

Figure 6. Output voltage vs. temperature (V_I = 4.25 V)

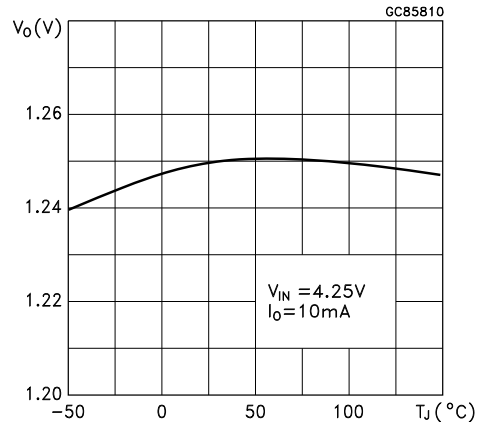

Figure 7. Short-circuit current vs. dropout voltage

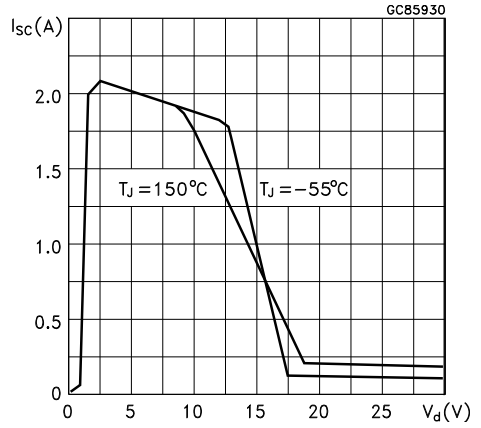

Figure 8. Line regulation vs. temperature

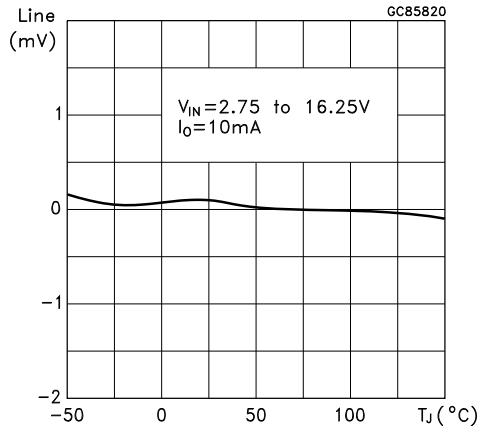

Figure 9. Load regulation vs. temperature

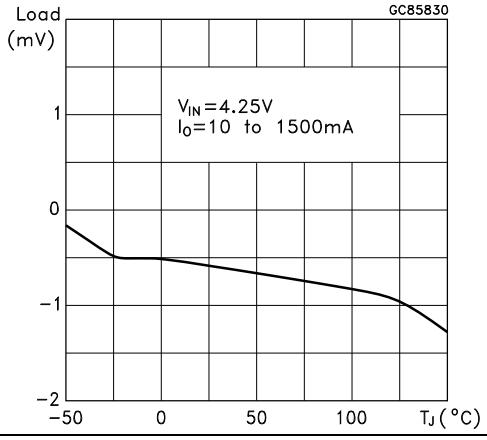

Figure 10. Dropout voltage vs. temperature

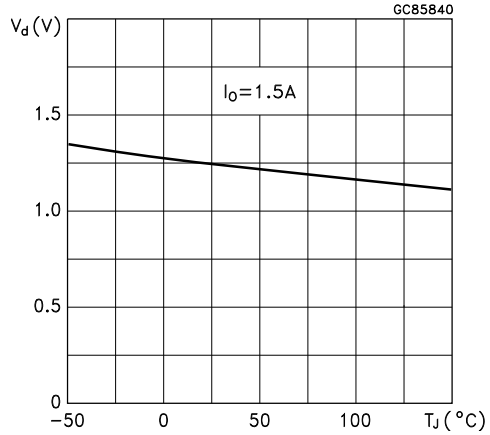

Figure 11. Dropout voltage vs. output current

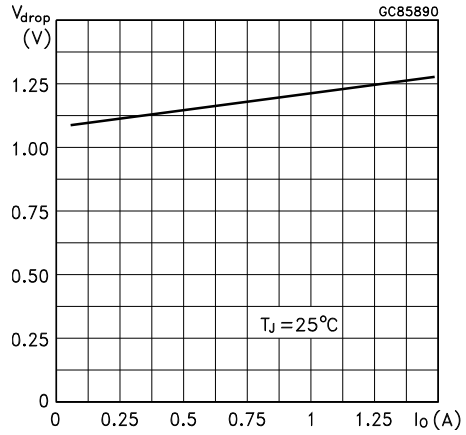

Figure 12. Adjust pin current vs. input voltage

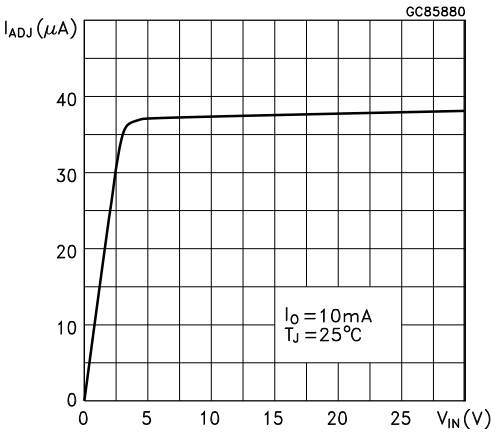

Figure 13. Adjust pin current vs. temperature

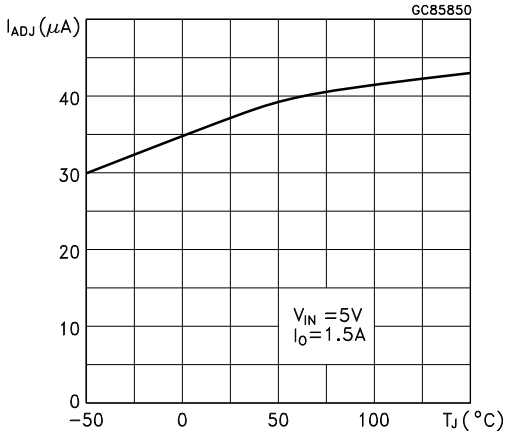

Figure 14. Adjust pin current vs. output current

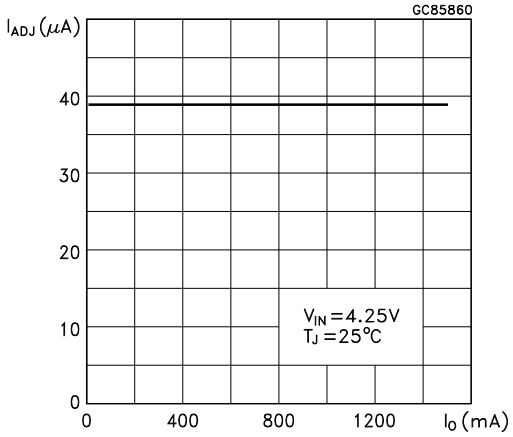

Figure 15. Quiescent current vs. output current

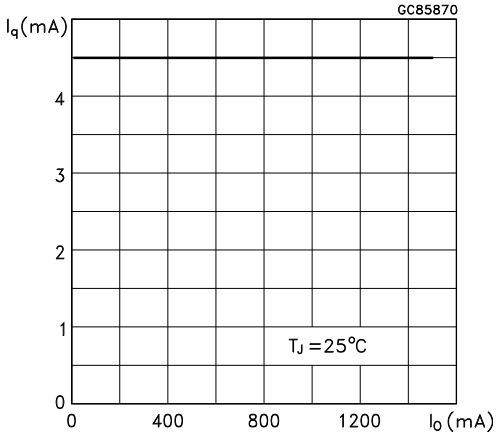

Figure 16. Quiescent current vs. input voltage

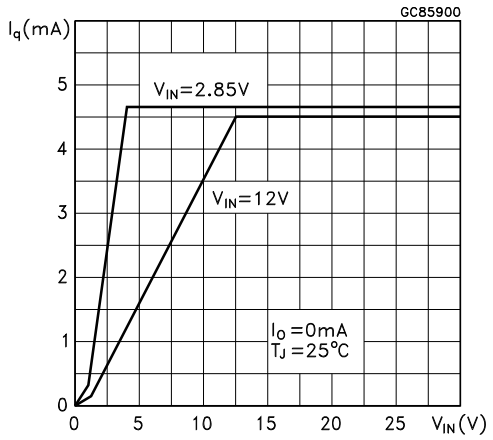

Figure 17. Supply voltage rejection vs. output current

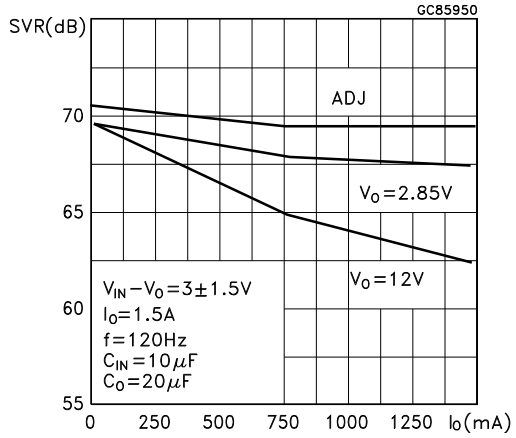

Figure 18. Supply voltage rejection vs. frequency

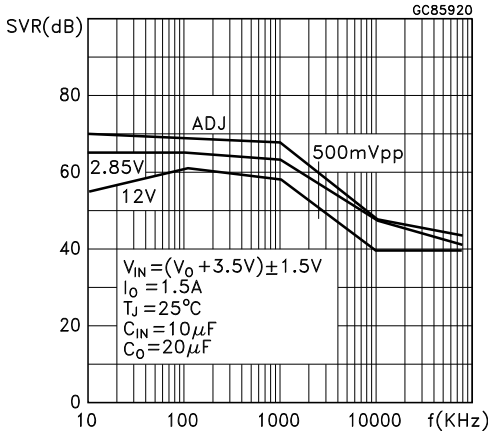

Figure 19. Supply voltage rejection vs. temperature

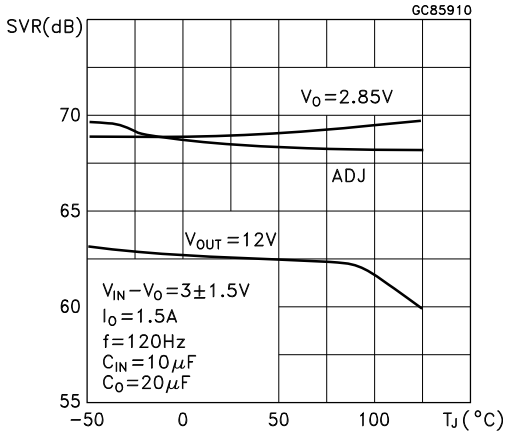

Figure 20. Minimum load current vs. temperature

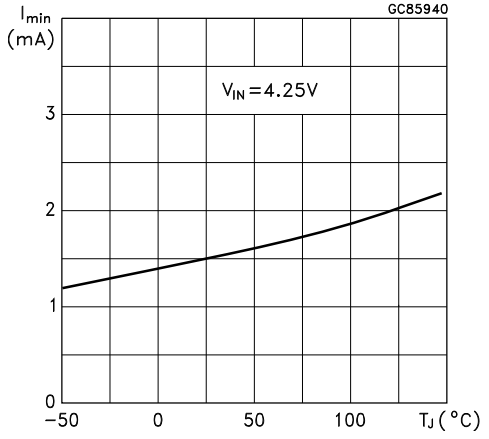

Figure 21. Stability for adjustable

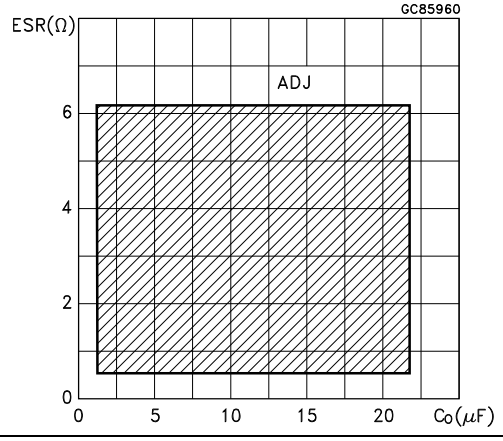

Figure 22. Stability for 2.85 V

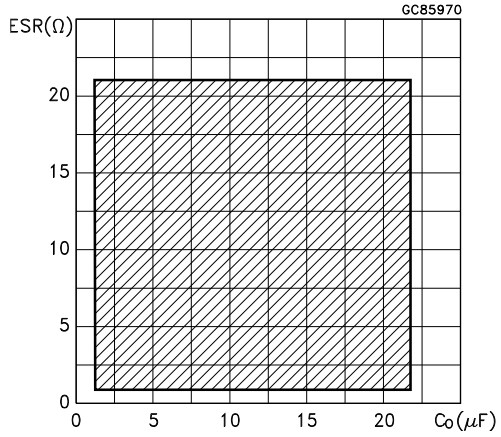

Figure 23. Stability for 12 V

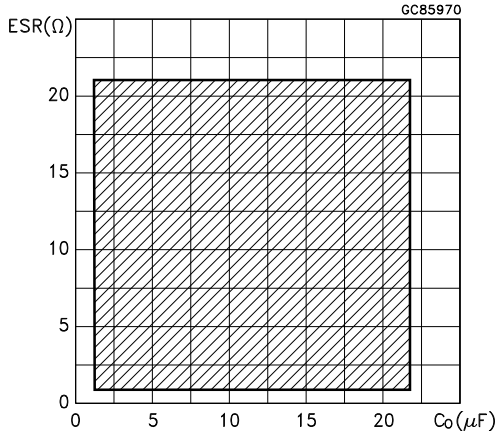

Figure 24. Line transient (V_I = 12 to 13 V)

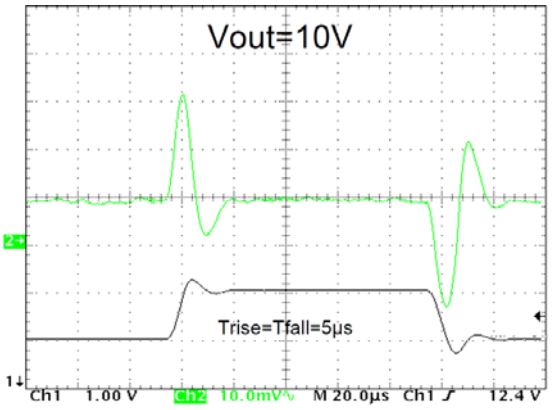

V_I = 12 to 13 V, I_O = 200 mA, C_I = 1 µF (tant), C_O = 10 µF (tant), No C_{ADJ}

Figure 25. Line transient (I_O = 200 mA)

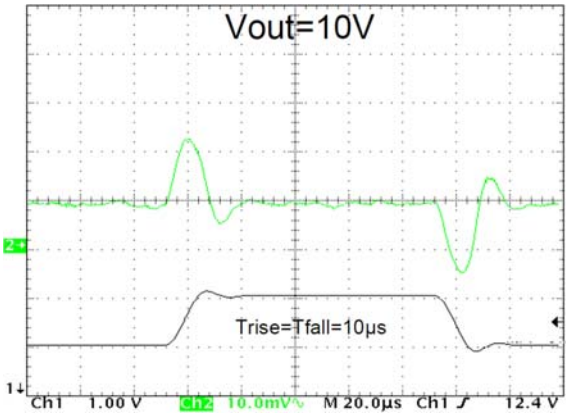

V_I = 12 to 13 V, I_O = 200 mA, C_I = 1 µF (tant), C_O = 10 µF (tant), No C_{ADJ}

Figure 26. Line transient (C_{ADJ} = 1 µF)

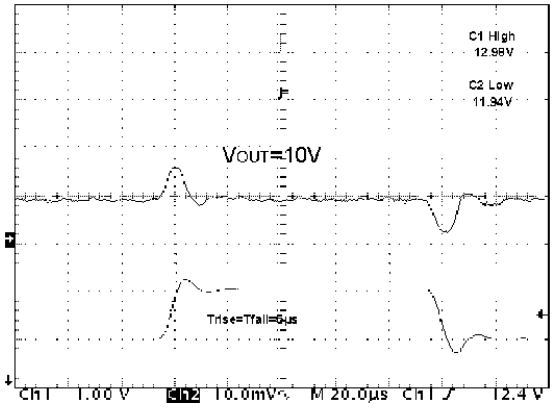

V_I = 12 to 13 V, I_O = 200 mA, C_I = 1 µF (tant), C_O = 10 µF (tant), C_{ADJ} = 1 µF

Figure 27. Load transient

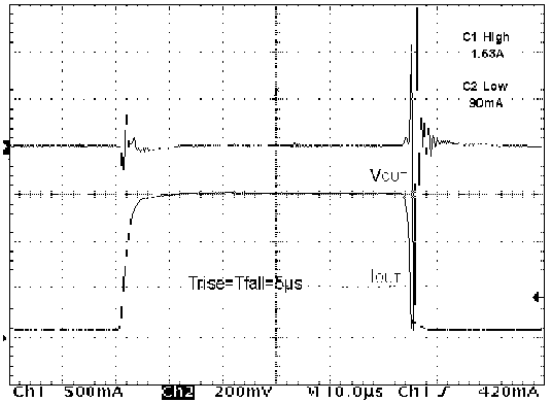

V_I = 13 V, I_O = 0.1 to 1.5 A, C_I = 1 µF (tant), C_O = 10 µF (tant) C_{ADJ} = 1 µF

Figure 28. Load transient (T_{rise} = T_{fall} = 10 µs)

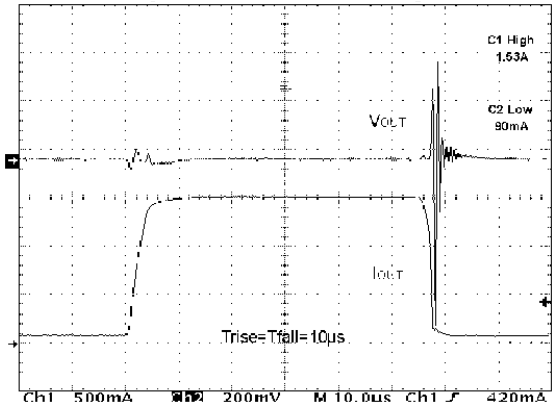

V_I = 13 V, I_O = 0.1 to 1.5 A, C_I = 1 µF (tant), C_O = 10 µF (tant), C_{ADJ} = 1 µF

Figure 29. Thermal protection

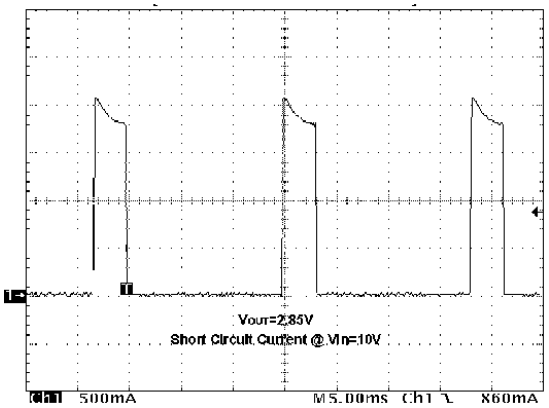

V_O = 2.85 V

7 Package information

In order to meet environmental requirements, ST offers these devices in different grades of ECOPACK® packages, depending on their level of environmental compliance. ECOPACK® specifications, grade definitions and product status are available at: *www.st.com*. ECOPACK® is an ST trademark.

7.1 TO-220 (STD-ST dual gauge) type A package information

Figure 30. TO-220 (STD-ST dual gauge) type A package outline

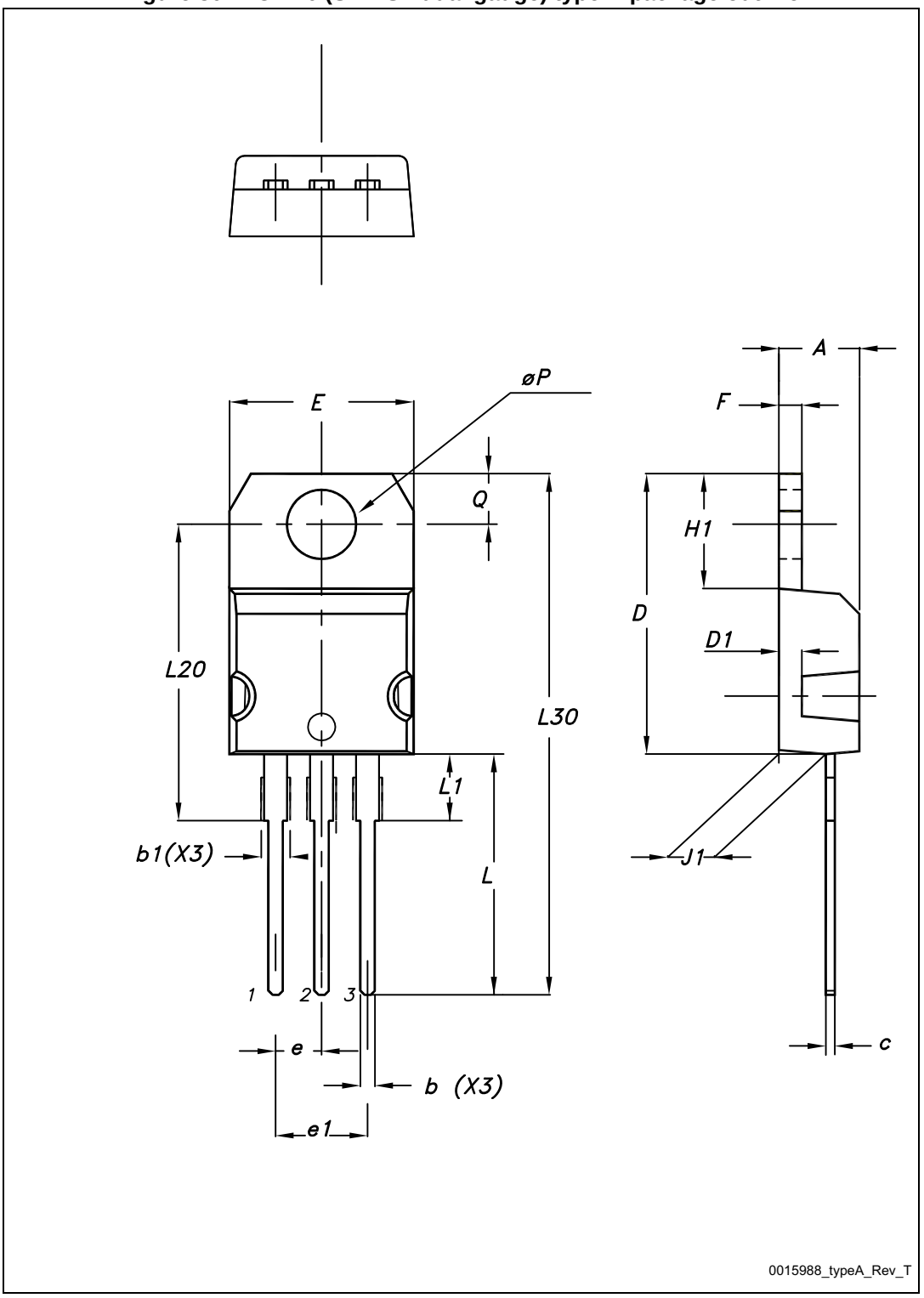

Table 11. TO-220 (STD-ST dual gauge) type A mechanical data

Dim.	mm		
	Min.	Typ.	Max.
A	4.40		4.60
b	0.61		0.88
b1	1.14		1.70
c	0.48		0.70
D	15.25		15.75
D1		1.27	
E	10		10.40
e	2.40		2.70
e1	4.95		5.15
F	1.23		1.32
H1	6.20		6.60
J1	2.40		2.72
L	13		14
L1	3.50		3.93
L20		16.40	
L30		28.90	
∅P	3.75		3.85
Q	2.65		2.95

7.2 DPAK package information

Figure 31. DPAK package outline

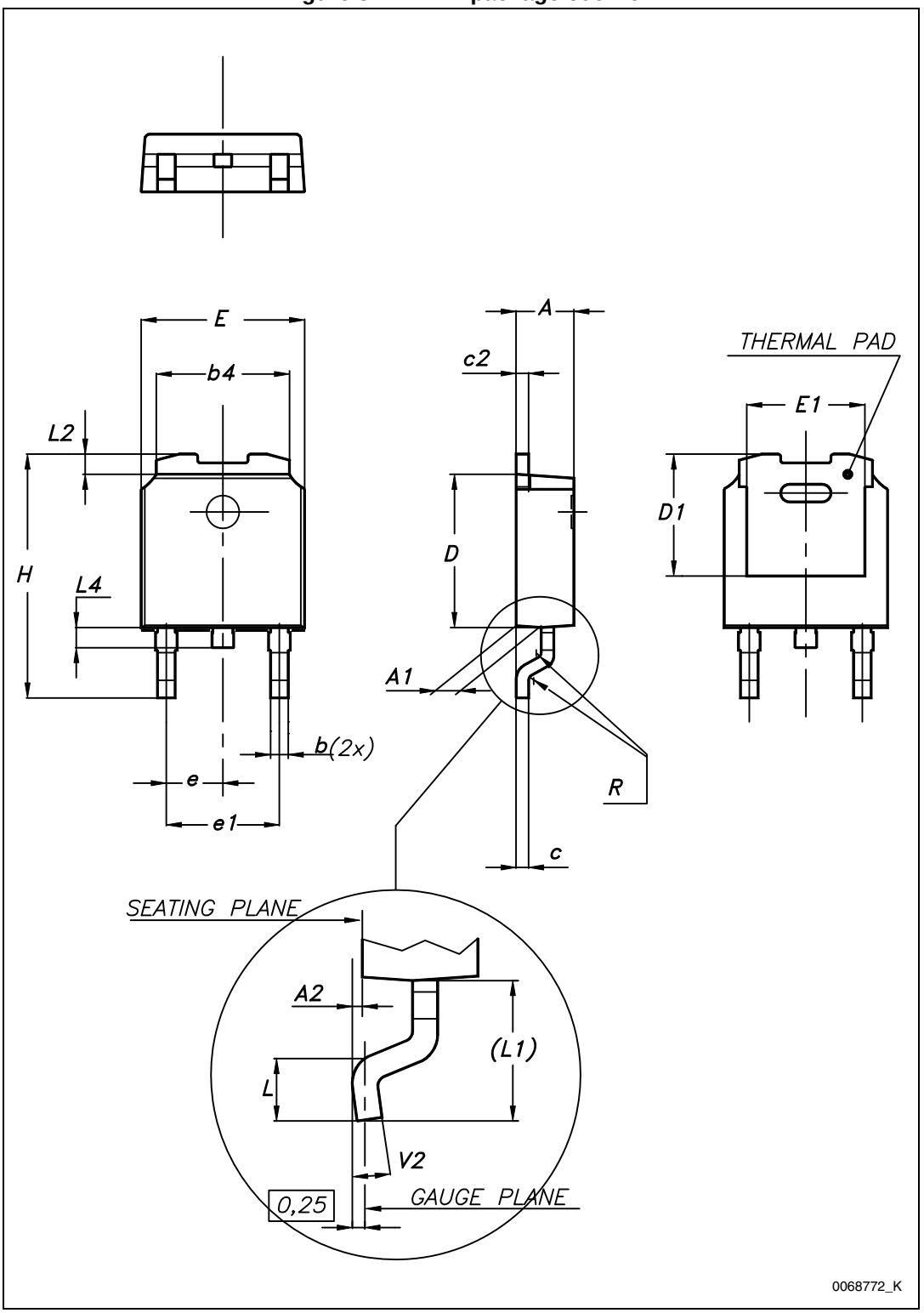

Table 12. DPAK mechanical data

Dim.	mm		
	Min.	Typ.	Max.
A	2.20		2.40
A1	0.90		1.10
A2	0.03		0.23
b	0.64		0.90
b4	5.20		5.40
c	0.45		0.60
c2	0.48		0.60
D	6.00		6.20
D1		5.10	
E	6.40		6.60
E1		4.70	
e		2.28	
e1	4.40		4.60
H	9.35		10.10
L	1.00		1.50
(L1)		2.80	
L2		0.80	
L4	0.60		1.00
R		0.20	
V2	0°		8°

Figure 32. DPAK recommended footprint (dimension are in mm)

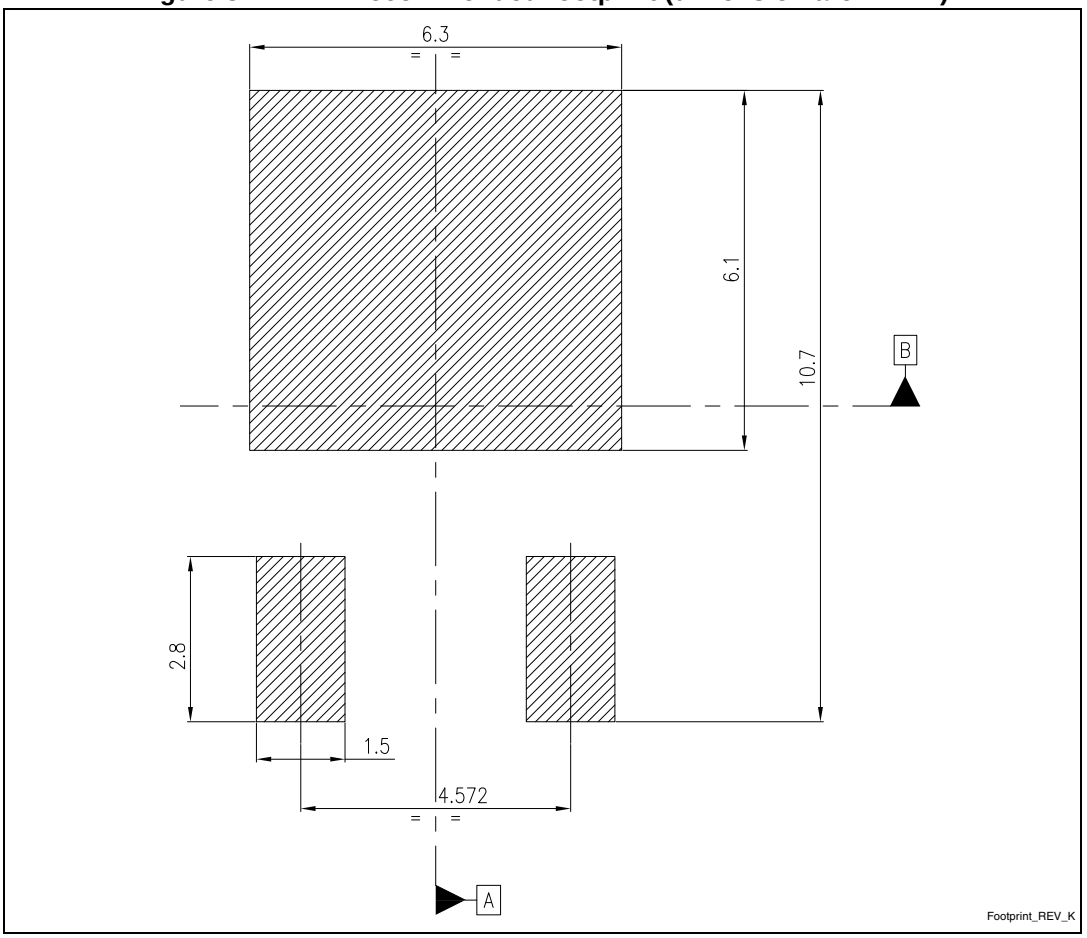

7.3 D²PAK (SMD 2L STD-ST) type A package information

Figure 33. D²PAK (SMD 2L STD-ST) type A package outline

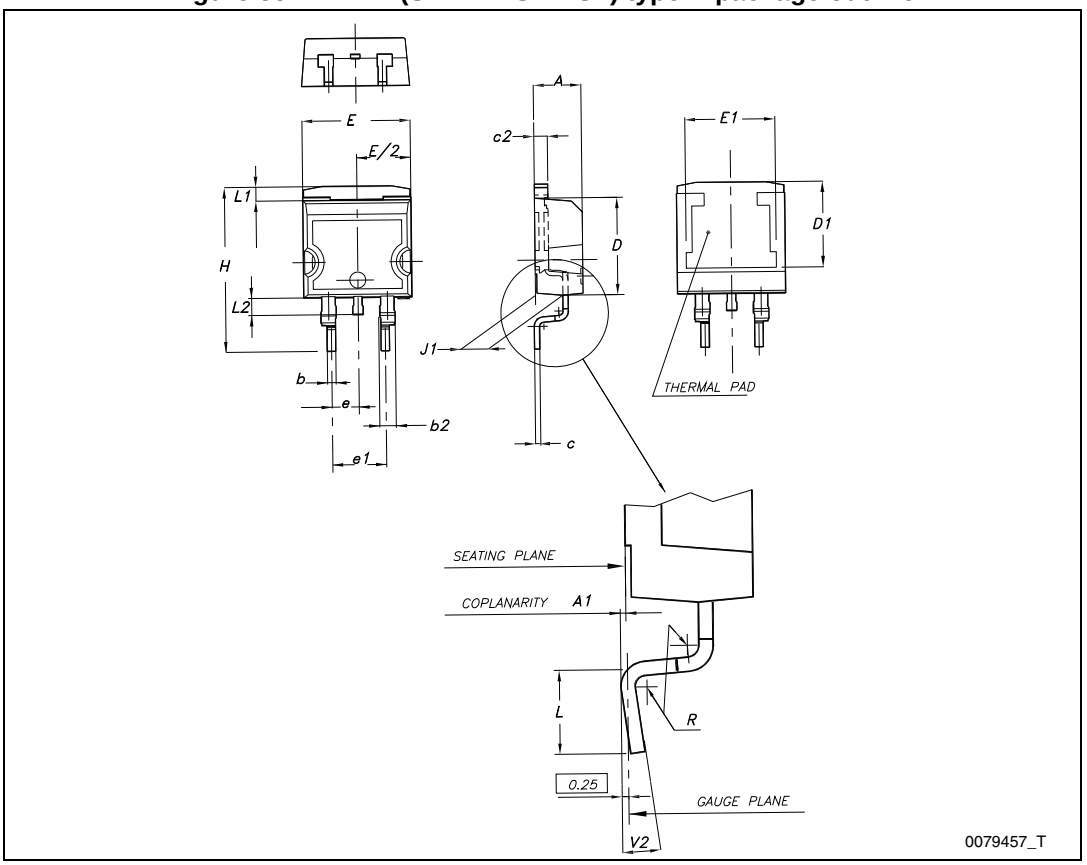

Table 13. D²PAK (SMD 2L STD-ST) type A mechanical data

Dim.	mm		
	Min.	Typ.	Max.
A	4.40		4.60
A1	0.03		0.23
b	0.70		0.93
b2	1.14		1.70
c	0.45		0.60
c2	1.23		1.36
D	8.95		9.35
D1	7.50		
E	10		10.40
E1	8.50		
e		2.54	
e1	4.88		5.28
H	15		15.85
J1	2.49		2.69
L	2.29		2.79
L1	1.27		1.40
L2	1.30		1.75
R		0.4	
V2	0°		8°

7.4 D²PAK (SMD 3L STD-ST) type A package information

Figure 34. D²PAK (SMD 3L STD-ST) type A outline

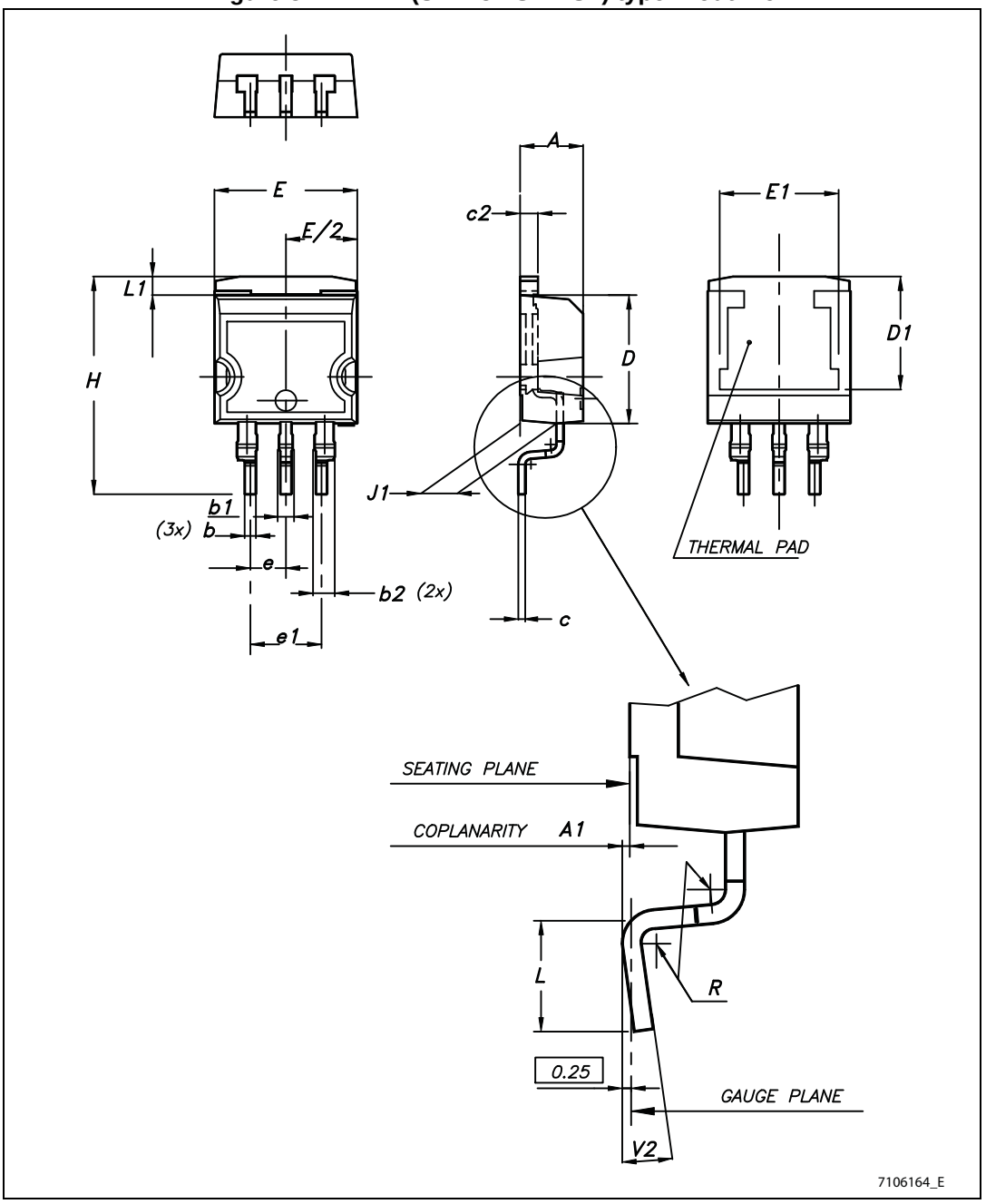

Table 14. D²PAK (SMD 3L STD-ST) type A mechanical data

Dim.	mm		
	Min.	Typ.	Max.
A	4.40		4.60
A1	0.03		0.23
b	0.70		0.93
b1	0.80		1.30
b2	1.14		1.70
c	0.45		0.60
c2	1.23		1.36
D	8.95		9.35
D1	7.50		
E	10		10.40
E1	8.50		
e		2.54	
e1	4.88		5.28
H	15		15.85
J1	2.49		2.69
L	2.29		2.79
L1	1.27		1.40
R		0.4	
V2	0°		8°

Figure 35. D²PAK (SMD 3L) recommended footprint

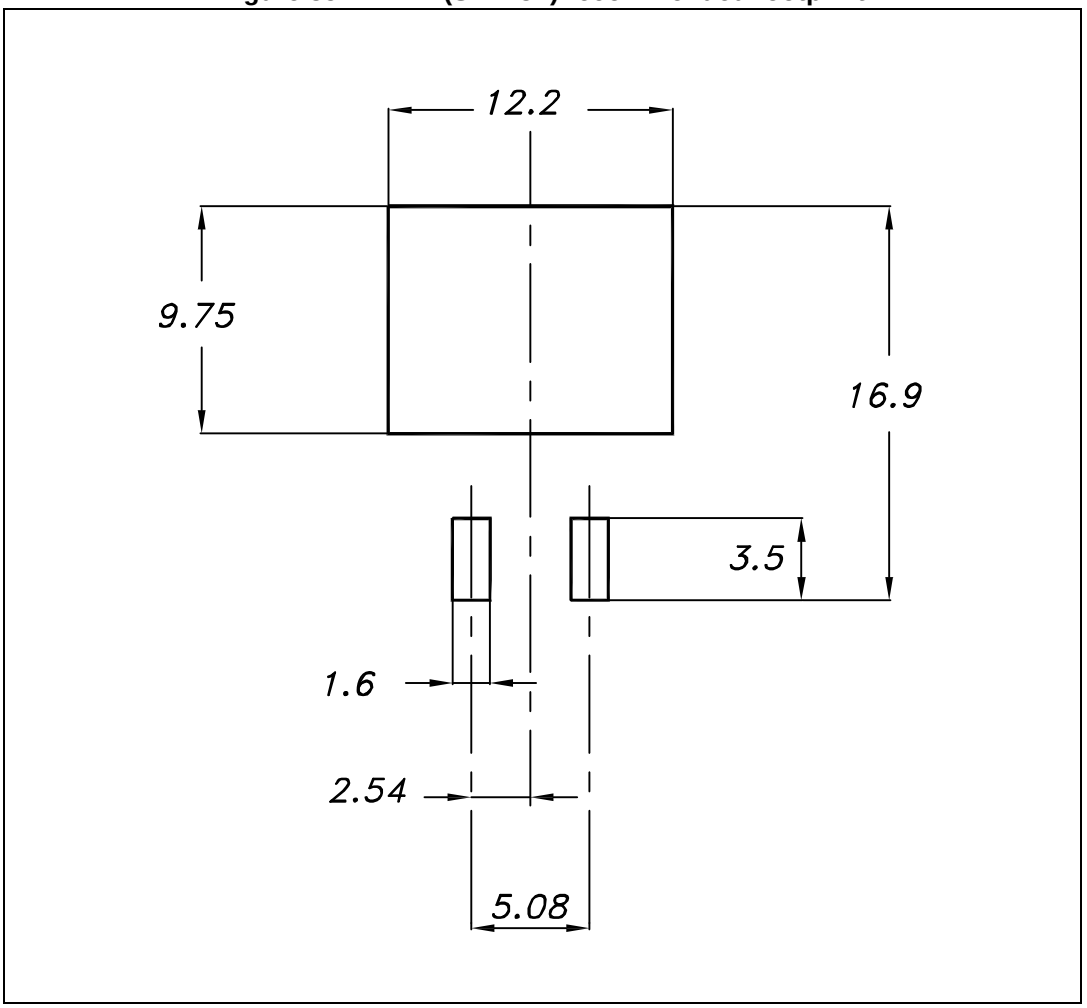

7.5 DPAK and D²PAK packing information

Figure 36. DPAK and D²PAK tape outline

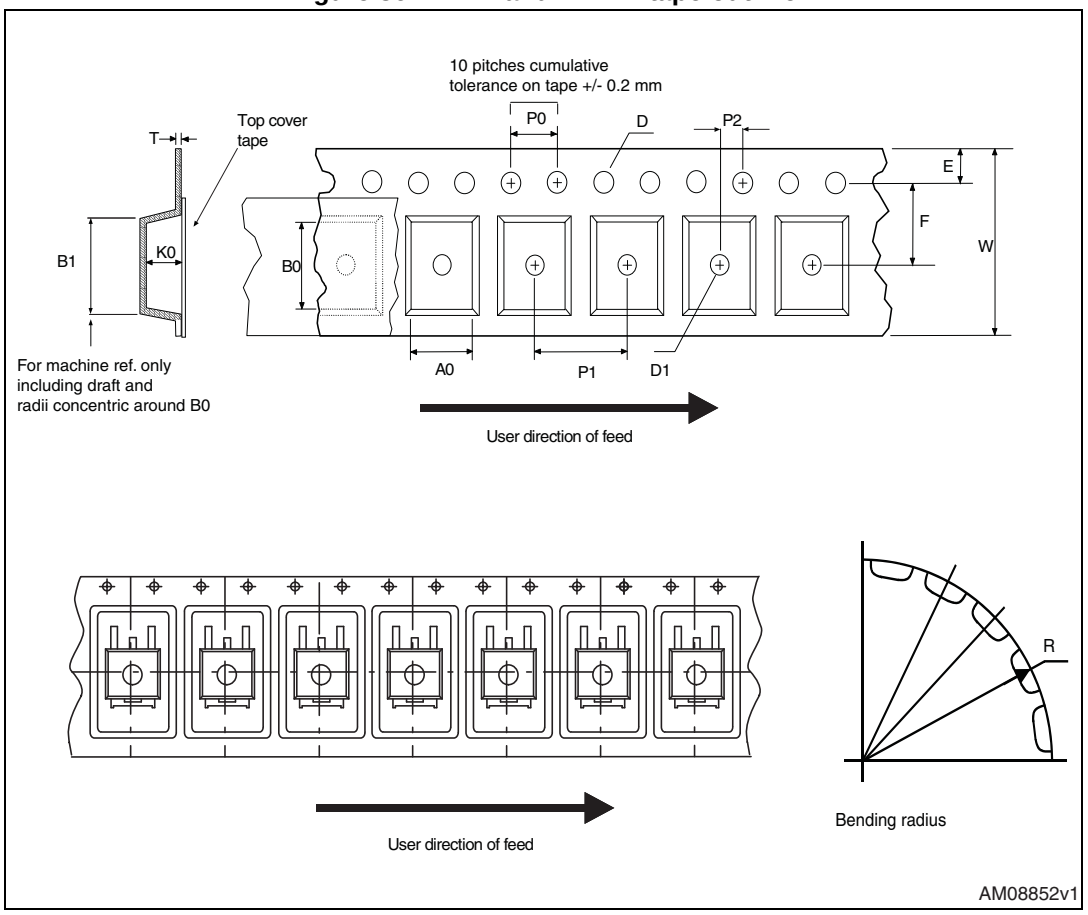

Figure 37. DPAK and D²PAK reel outline

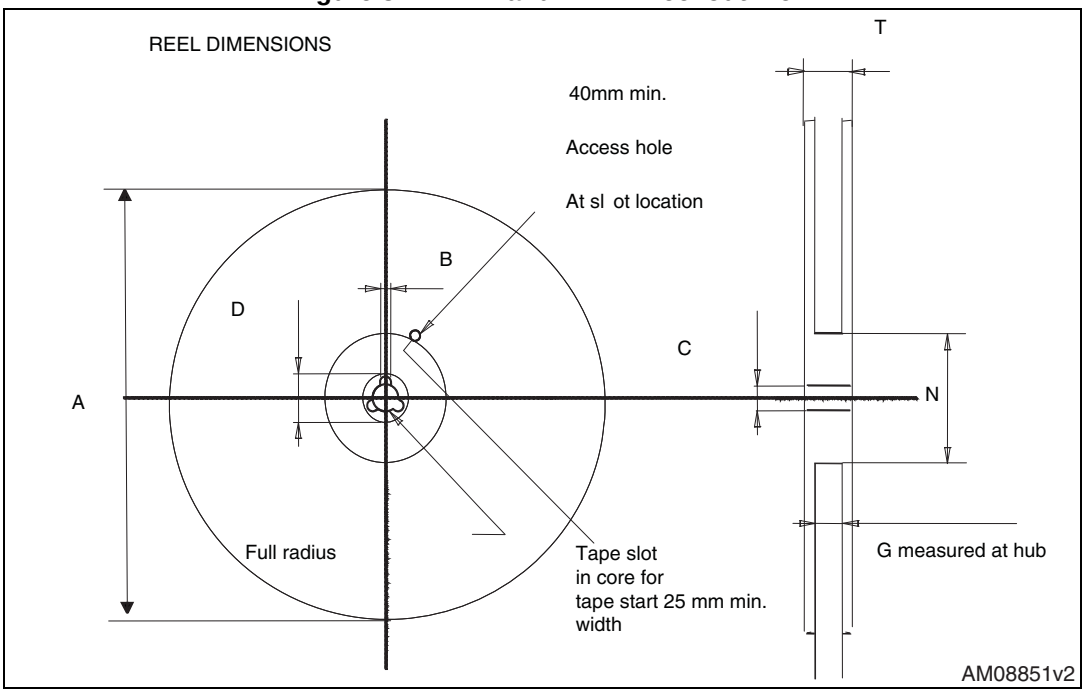

Table 15. DPAK and D²PAK tape and reel mechanical data

Tape			Reel		
Dim.	mm		Dim.	mm	
	Min.	Max.		Min.	Max.
A0	6.8	7	A		330
B0	10.4	10.6	B	1.5	
B1		12.1	C	12.8	13.2
D	1.5	1.6	D	20.2	
D1	1.5		G	16.4	18.4
E	1.65	1.85	N	50	
F	7.4	7.6	T		22.4
K0	2.55	2.75			
P0	3.9	4.1	Base qty.		2500
P1	7.9	8.1	Bulk qty.		2500
P2	1.9	2.1			
R	40				
T	0.25	0.35			
W	15.7	16.3			

7.6 DFN8 (4x4) package information

Figure 38. DFN8 (4x4) package outline

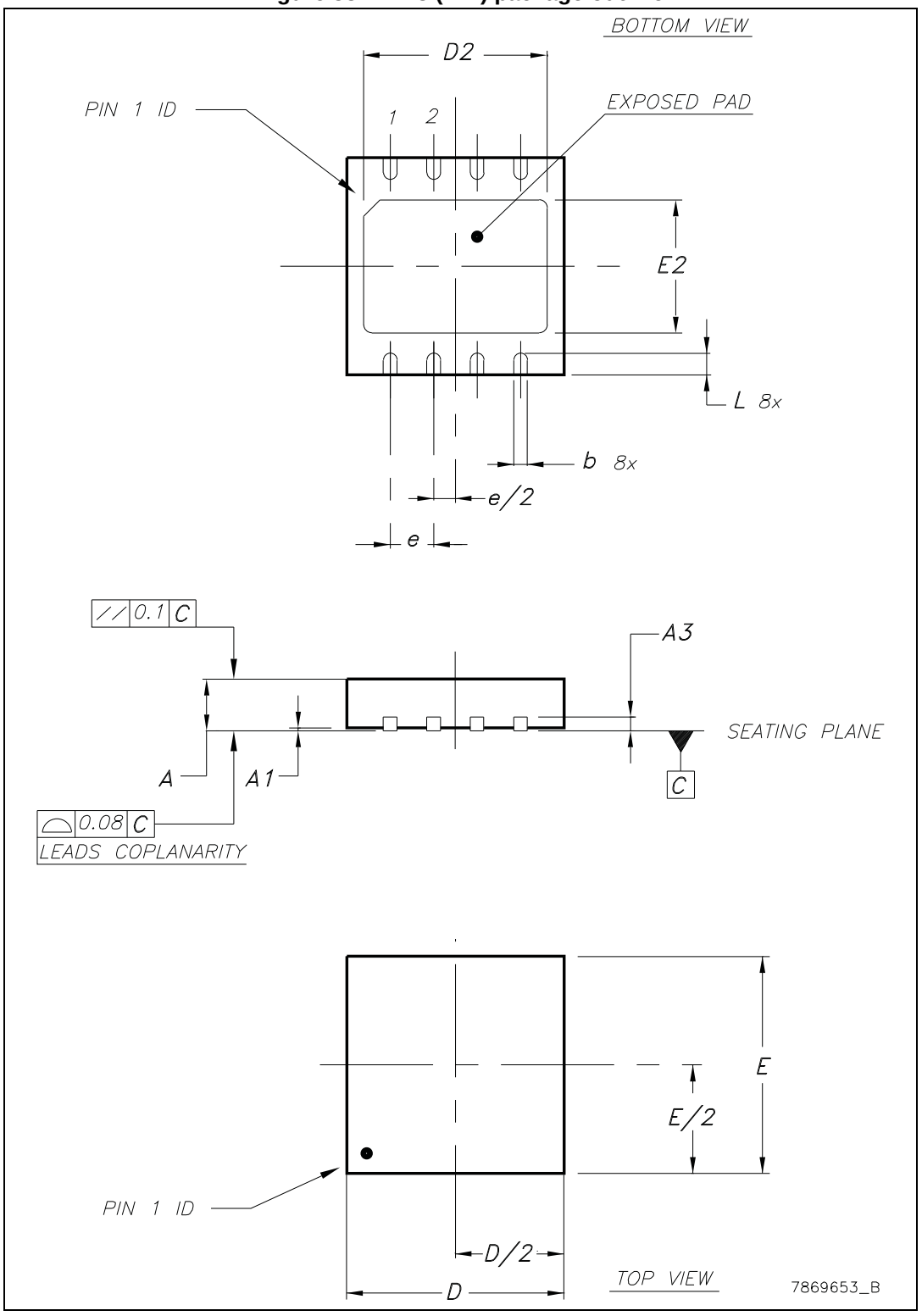

Table 16. DFN8 (4x4) mechanical data

Dim.	mm.		
	Min.	Typ.	Max.
A	0.80	0.90	1
A1	0	0.02	0.05
A3		0,20	
b	0.23	0.30	0.38
D	3.90	4	4.10
D2	2.82	3	3.23
E	3.90	4	4.10
E2	2.05	2.20	2.30
e		0.80	
L	0.40	0.50	0.60

Figure 39. DFN8 (4x4) recommended footprint

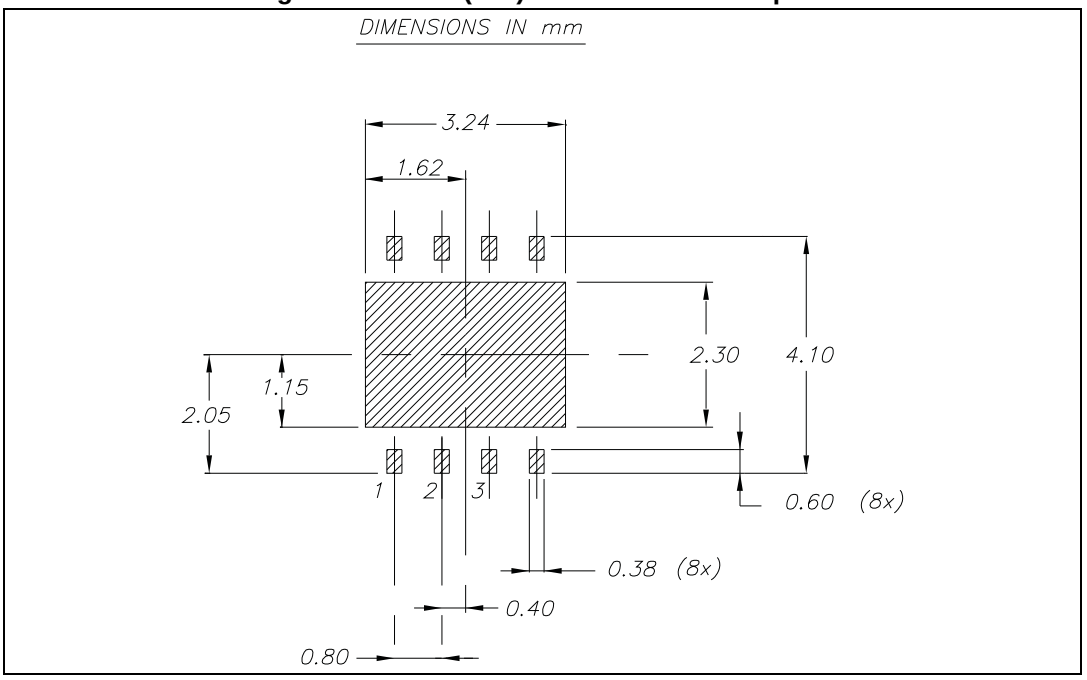

7.7 DFN8 (4x4) packing information

Figure 40. DFN8 (4x4) tape outline (dimension are in mm)

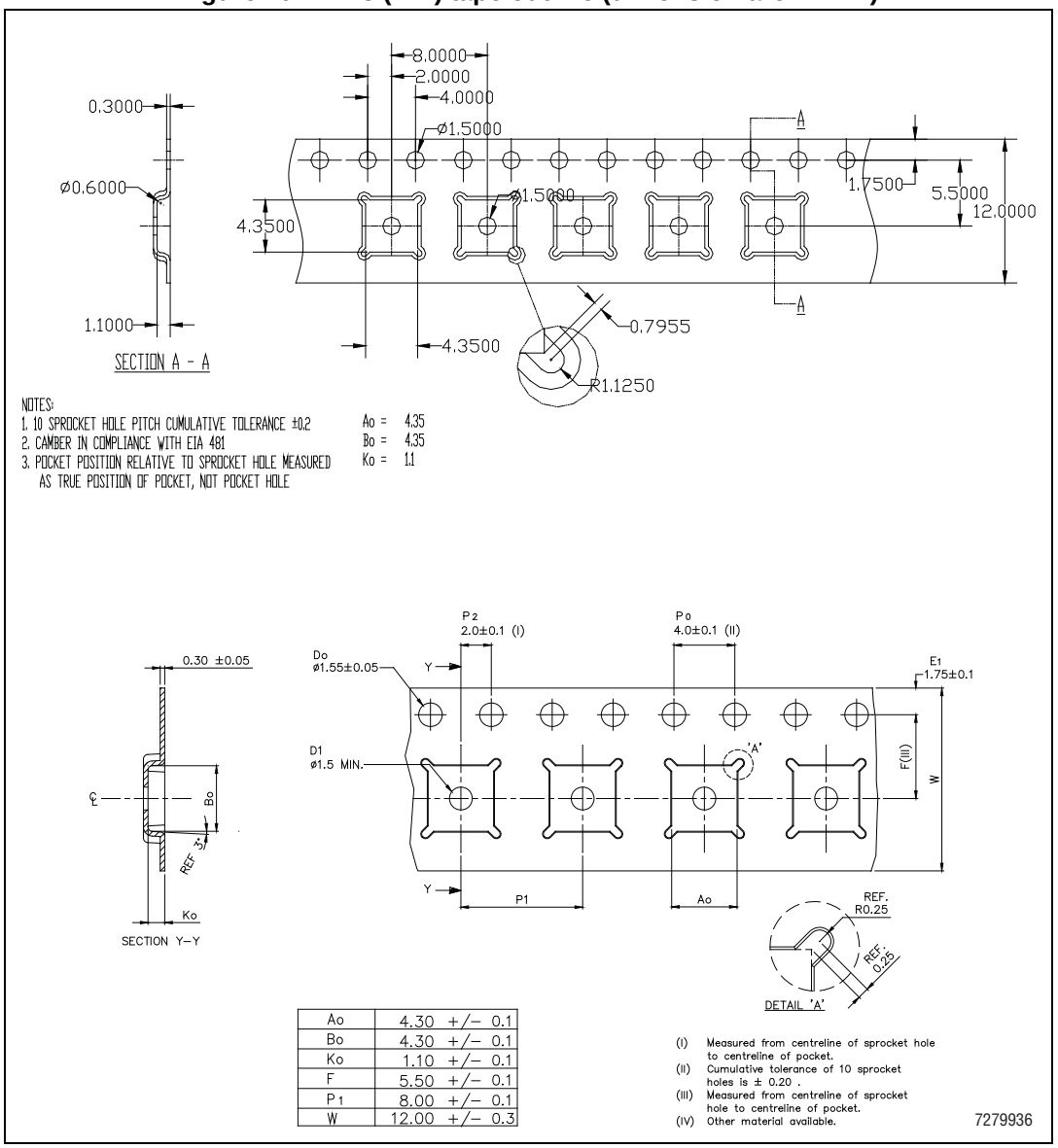

Ao	4.30 +/– 0.1
Bo	4.30 +/– 0.1
Ko	1.10 +/– 0.1
F	5.50 +/– 0.1
P1	8.00 +/– 0.1
W	12.00 +/– 0.3

Table 17. DFN8 (4x4) reel mechanical data

Dim.	mm.			inch.		
	Min.	Typ.	Max.	Min.	Typ.	Max.
A			330			12.992
C	12.8	13.0	13.2	0.504	0.512	0.519
D	20.2			0.795		
N	60			2.362		
T			22.4			0.882

Figure 41. DFN8 (4x4) reel outline

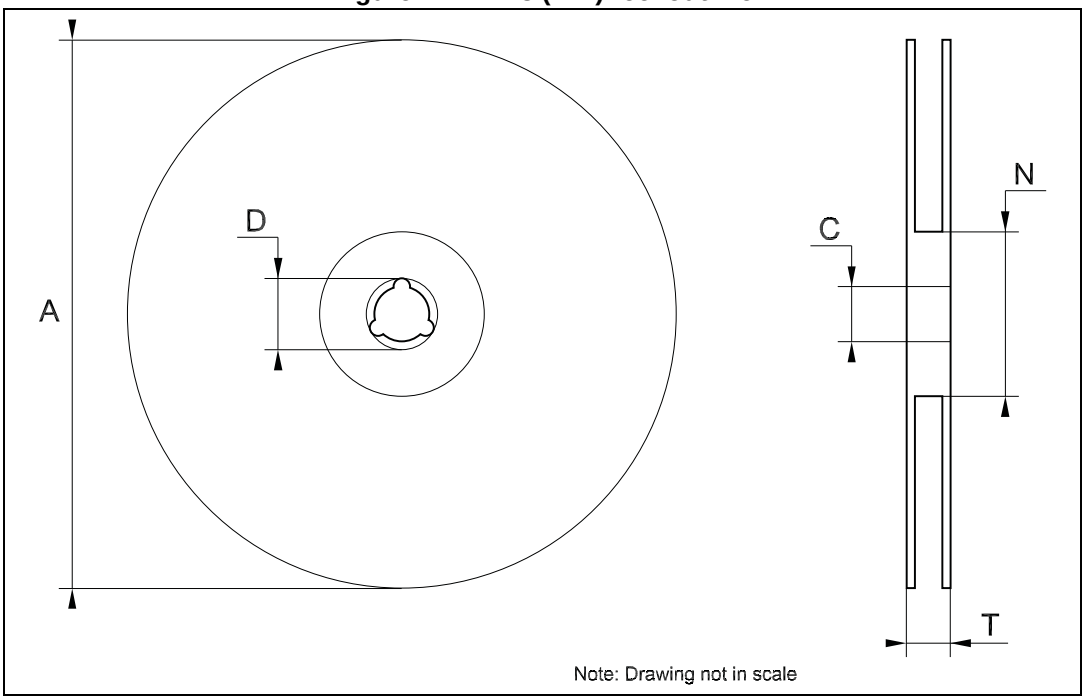

8 Ordering information

Table 18. Order code

Packages					
TO-220	**D²PAK**	**D²PAK/A**	**DPAK**	**DFN8 (4x4)**	**Output voltages**
LD1086V18-DG	LD1086D2T18TR		LD1086DT18TR		1.8 V
			LD1086DT25TR		2.5 V
LD1086V33-DG	LD1086D2T33TR	LD1086D2M33TR	LD1086DT33TR		3.3 V
	LD1086D2T50TR		LD1086DT50TR		5.0 V
	LD1086D2T12TR				12.0 V
LD1086V-DG	LD1086D2TTR	LD1086D2MTR	LD1086DTTR	LD1086PUR	ADJ
LD1086VY (1)			LD1086DTTRY (2)		ADJ
LD1086BV-DG	LD1086BD2TTR	LD1086BD2MTR	LD1086BDTTR		ADJ

1. Automotive grade products.

9 Revision history

Table 19. Document revision history

Date	Revision	Changes
16-May-2006	14	Order codes updated and new template.
19-Jan-2007	15	D²PAK mechanical data updated and add footprint data.
05-Apr-2007	16	Order codes updated.
07-Jun-2007	17	Order codes updated.
19-Jul-2007	18	Add note on Figure 2.
03-Dec-2007	19	Modified: Table 18.
31-Jan-2008	20	Added new order codes for Automotive grade products.
18-Feb-2008	21	Modified: Table 18 on page 39.
14-Jul-2008	22	Modified: Table 1 on page 7 and Table 18 on page 39.
10-Mar-2010	23	Added: Table 12 on page 26, Figure 30 on page 23, Figure 31 on page 25, Figure 31 and Figure 32 on page 27.
15-Nov-2010	24	Modified: RthJC value for TO-220 Table 2 on page 7.
11-Jul-2011	25	Modified: Figure 24, Figure 25 on page 20 and Table 18 on page 39.
10-Feb-2012	26	Added: order code LD1086V-DG Table 18 on page 39.
15-Mar-2012	27	Added: new order code LD1086PUR Table 18 on page 39 and new package mechanical data DFN8 (4x4 mm) Table 16 on page 36, Figure 38 on page 35, Figure 39 on page 36, Figure 40 on page 37 and Figure 41 on page 38.
19-Oct-2012	28	Added: RthJA value for DPAK Table 2 on page 7.
13-Feb-2013	29	Modified: Output voltage in Voltage reference parameter Table 8 on page 14 and Table 10 on page 16.
01-Mar-2013	30	Modified: DFN8 (4 x 4) pin configuration Figure 2 on page 6.
17-Jun-2013	31	Added Table 8: Electrical characteristics of LD1086B# and Section 7.7: DFN8 (4x4) packing information. Updated Section 7: Package information and Table 18: Order code. Minor text changes.
22-Oct-2013	32	RPN LD1086xx changed to LD1086. Updated the Description in cover page. Cancelled Table 1: Device summary. Updated Figure 2: Pin connections (top view), Section 5: Electrical characteristics, Section 7: Package information and Table 18: Order code. Minor text changes.
18-Dec-2014	33	Updated Table 6.: Electrical characteristics of LD1086#50, Section 7: Package information and Section 7.7: DFN8 (4x4) packing information. Minor text changes.
10-Feb-2015	34	Updated Table 18: Order code. Minor text changes.

Table 19. Document revision history (continued)

Date	Revision	Changes
16-Nov-2015	35	Updated Section 7: Package information and Table 18: Order code Minor text changes.
19-Dec-2017	36	Updated T_J value in *Table 1: Absolute maximum ratings*.

IMPORTANT NOTICE – PLEASE READ CAREFULLY

STMicroelectronics NV and its subsidiaries (“ST”) reserve the right to make changes, corrections, enhancements, modifications, and improvements to ST products and/or to this document at any time without notice. Purchasers should obtain the latest relevant information on ST products before placing orders. ST products are sold pursuant to ST’s terms and conditions of sale in place at the time of order acknowledgement.

Purchasers are solely responsible for the choice, selection, and use of ST products and ST assumes no liability for application assistance or the design of Purchasers’ products.

No license, express or implied, to any intellectual property right is granted by ST herein.

Resale of ST products with provisions different from the information set forth herein shall void any warranty granted by ST for such product.

ST and the ST logo are trademarks of ST. All other product or service names are the property of their respective owners.

Information in this document supersedes and replaces information previously supplied in any prior versions of this document.

© 2017 STMicroelectronics – All rights reserved